GPS Radiosonde
RS-11G

Outline

GPS radiosonde is an upper-air sounding instrument flying with weather balloon. As the balloon ascends, radiosonde measures variety of meteorological data; wind speed, wind direction, pressure, height, temperature and humidity. Wind speed, wind direction and pressure are calculated from the travel speed and altitude obtained by GPS information. Temperature and humidity data are obtained from dedicated thermistor and electrostatic capacitance humidity sensor, respectively. Measured data are transmitted to ground receiving system every second using 400-406 MHz band.

Redesigned sensor boom achieves higher accuracy in temperature measurement. Also, newly developed high response humidity sensor enables more accurate humidity measurement even in low temperature environment.
RS-11G enables various kinds of soundings through expansive interfaces, such as MTR (16 Hz temperature sampling), CFH (Cryogenic Frostpoint Hygrometer), Radioactivity sonde, ECC Ozone sonde, Cloud Particles Sensor (CPS), etc.

Features:

- **Improved temperature and humidity sensor with high accuracy for upper-air sounding**

- **Redesigned rain-resistant cap for humidity sensor improves more accurate humidity measurement even in low temperature environment.**

- **One lithium battery enables more than 3 hours sounding operation.**

- **Equipped with SBAS receiver**
SBAS for GPS positioning improves measurement performance.

- **High stability transmitter complying with ETSI (EN 302 054 V1.1.1)**

- **Safe operation**
Lightweight RS-11G (85g: Including a battery) enhancing safety with reduced risk of accident when it falls down.

- **A/D 5ch and serial port supporting various special sensors; ECC, CFH, MTR, CPS, etc.**

- **Capable of using ground receiver RD-08AC and sounding software MGPS-R**

Block Diagrams

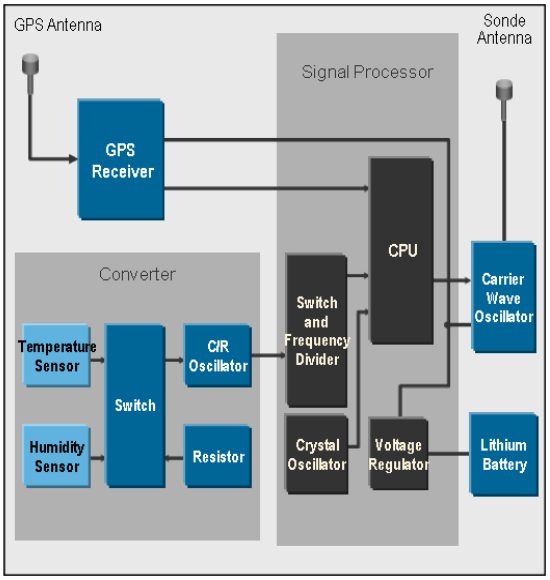

IHI GROUP
Realize your dreams

No. MSPA4-033

Specifications

Temperature	Measurement range	-90℃ to +60℃
	Resolution	0.1℃
	Uncertainty *(a)	Daytime 0.5℃: Troposphere 0.8℃: Stratosphere Nighttime 0.4℃: Troposphere 0.4℃: Stratosphere
	Response time	< 0.4 s (1,000 hPa, 5 m/s)
Humidity	Measurement range	0%RH to 100%RH
	Resolution	0.1%RH
	Uncertainty *(b)	5%RH: Lower Troposhere 7%RH: Upper Troposhere
	Response time	< 0.2 s (Absorbing, 1,000 hPa, 6 m/s , 0℃) < 14 s (Absorbing, 1,000 hPa, 6 m/s, -60℃)
Pressure *1	Measurement range	1050.0 hPa to 3.0 hPa
	Resolution	0.1 hPa
	Uncertainty *(c)	1.2 hPa: Surface 0.5 hPa: 15 km 0.2 hPa: 30 km
Geopotential Height of significant level *1	Measurement range	-500.0 m to 40,000.0 m
	Resolution	0.1 m
	Uncertainty *(c)	11 m
Wind Direction *1	Measurement range	0 deg to 359.9 deg
	Resolution	0.01 deg
	Uncertainty *(d)	2 deg
Wind Speed *1	Measurement range	0.00 m/s to 200.0 m/s
	Resolution	0.01 m/s
	Uncertainty	2 m/s Troposphere 3 m/s Stratosphere
GPS Receiver	Frequency	1574.25 MHz ±1MHz
	Number of channels	12 parallel channels
	Positioning Technology	DGPS (SBAS)
Usage Environment	Pressure	1050.0 hPa to 3.0 hPa
	Temperature	-90℃ to +60℃
	Humidity	0%RH to 100%RH

Transmitter	Center freq.	404.5 MHz
	Tuning range *2	400 MHz to 406MHz
	Band width	< 15 kHz
	Output power	< 100 mW
	Transmitter type	FM
	Standard	EN302 054 V1.1.1
Modulation	Modulation type	Digital PCM
	Baud rate	1,200 bps
	Range	< 250 km (with Yagi antenna)
	Sampling	1 sec. or 0.5 sec.
Power	Voltage	3.0 VDC
	Current	< 240 mA
	Battery type	Lithium battery × 1 (CR-123)
	Operating time	> 200 min.
I/F for additional sensor (Optionnal)		AD port × 5 channels Serial port × 1 channel,
Size & Weight *3	Dimensions	86(W)×67(D)×155(H) mm
	Weight	85 g (Including a battery)

Outline View

Unit (mm)

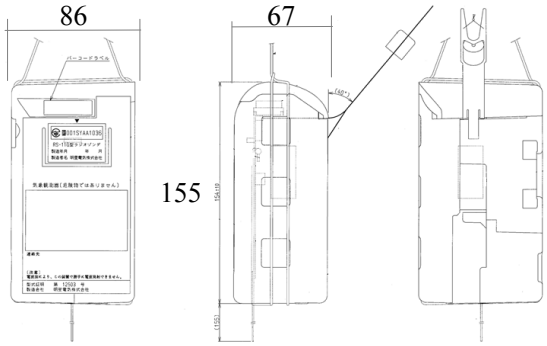

Note

*1) The accuracy of GPS positioning is dependent on the satellites's location and the reception level.
*2) Frequency can be changed every 100 kHz within the tuning range of 400 MHz and 406 MHz. Applicable Radio Law/Regulations should be complied.
*3) Dimensions excluding antenna and sensor boom. Weight includes a battery, etc.

Uncertainties are calculated on assumption that observation made under the ordinal weather conditions in the mid-latitude region.
*a) Evaporative cooling effect emerging from a cloud is not considered.
*b) Contamination due to rainy condition is not regarded.
*c) Under optimal conditions of GPS reception: PDOP=1
*d) Conditions under moderate wind: <5 m/s are not calculated.

⚠ Cautions

- For safe and correct usage, please read the "Operation Manual" prior to the use of the products.
- The specifications and appearances might be changed without prior notice, which please understand.
- The specifications shown in the catalog are of our standard products. We are pleased to customize it to meet customer's requirements. For the details, please contact us.
- Please understand in advance that our company cannot assume the responsibility of any claims made by the third party about any monetary damages or any loss of profits arising out from the use of our products.
- The color of the product photography on catalog might be different from that of actual product because of printing.

meisei electric co.,ltd.

1-1, Toyosu 3-chome,Koto-ku, Tokyo 135-8115, Japan
Tel: +81-3-6204-8254 Fax: +81-3-6204-8888
Mail: global@meisei.co.jp http://www.meisei.jp/sonde/
Global Marketing Gr.

IHI GROUP
Realize your dreams

The specifications this catalog are current as of September 2018.

No. MSPA4-033